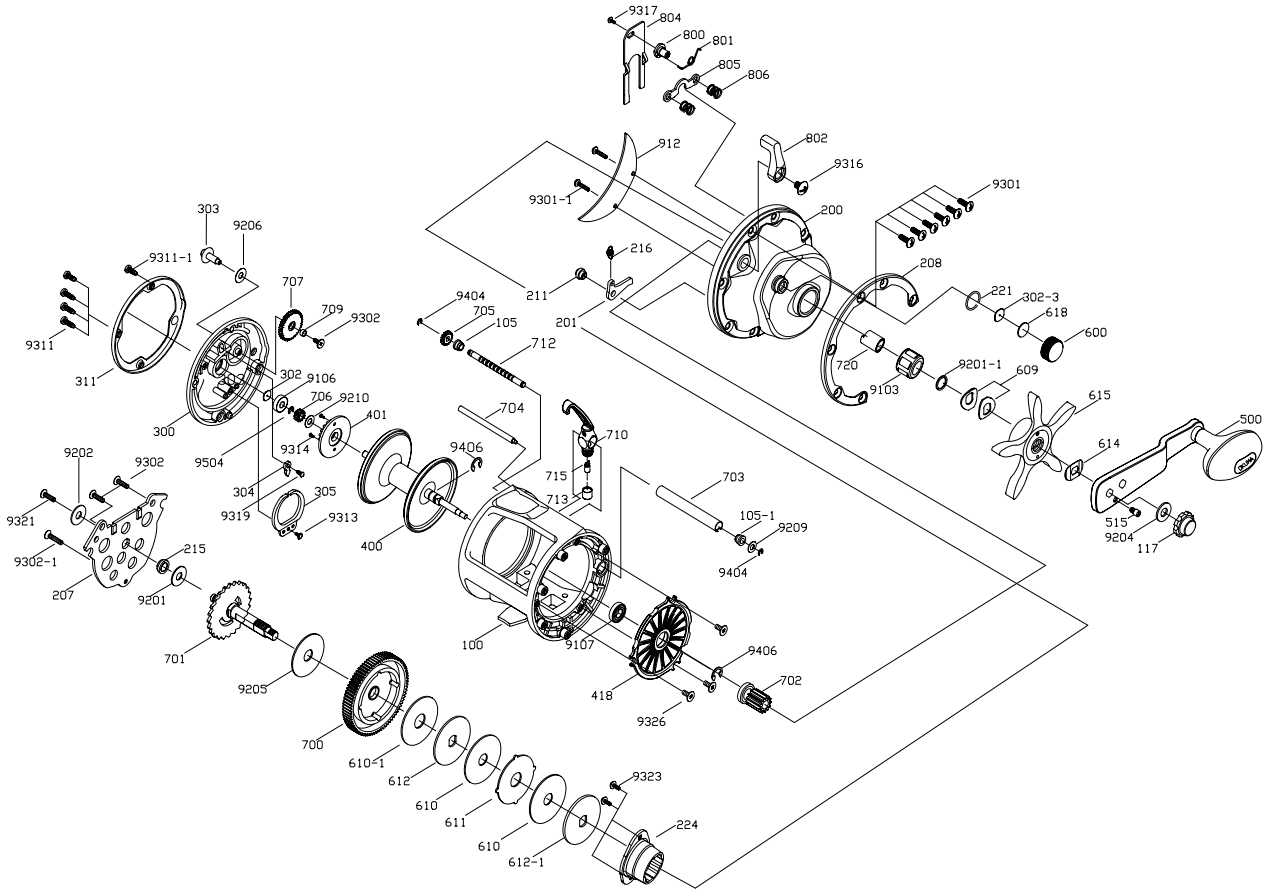


## CV - 45L Spare Parts

| key no | new part no | old part no | parts name | lot no |
|---|---|---|---|---|
| 100 | 11001162 | 1110006301001 | MAIN BODY ASSY. | |
| 105 | 11050006 | 11105003-01 | WORM SHAFT BUSHING | |
| 105-1 | 11050007 | 11105004-01 | WORM SHAFT BUSHING | |
| 117 | 11170017 | | NUT | |
| 200 | 12000998 | 11200069-01A01C | MAIN SIDE PLATE | |
| 201 | 12010013 | 11201013-06001 | ANTI-RE PAWL | |
| 207 | 12070059 | 11207024-06001 | HOLDED PLATE | |
| 208 | 12080032 | 11208014-06002 | SIDE PLATE COVERS | |
| 211 | 12110006 | 11211005-03001 | ANTI-RE PAWL PIN | |
| 215 | 12150015 | 11215011-03001 | HOLD PLATE BUSHING | |
| 216 | 12160004 | 11216001-06002 | ANTI-RE PAWL SPRING | |
| 221 | 12210001 | 11221001-07 | "O"RING | |
| 224 | 12240004 | 11224001-02905 | ONE WAY BEARING CAP | |
| 300 | 13000150 | 11300026-01 | VICE SIDE PLATE | |
| 302 | 13020014 | 11302002-06001 | WASHER | |
| 302-3 | 13020025 | 1130201301 | WASHER | |
| 303 | 13030005 | 11303004-03907 | CLICK BUTTON | |
| 304 | 13040001 | 11304003-06 | CLICK PAWL | 3046 |
| 304 | 13040015 | 11304011-16001 | CLICK PAWL | |
| 305 | 13050003 | 11305001-01002 | CLICK PAWL SPRING | 3046 |
| 305 | 13050006 | 11305002-06001 | CLICK PAWL SPRING | |
| 311 | 13110024 | 11311005-06002 | SIDE PLATE COVER | |
| 400 | 14000452 | 1140003414003A | SPOOL ASSY. | |
| 401 | 14010026 | 1140101101 | CLICK GEAR | |
| 418 | 14180003 | 11418003-01001 | SPOOL BEARING FIXED PLATE | |
| 500 | 15000236 | 1150002404005 | HANDLE ASSY. | |
| 515 | 15150001 | 11515001-03907 | HANDLE NUT SCREW | |
| 600 | 16000053 | 11600016-03001 | CAST CONTROL CAP | |
| 609 | 46090003 | 14609003-06001 | DRAG SPRING WASHER | 3030 |
| 609 | 16090004 | 11609003-06001 | DRAG SPRING WASHER | |
| 609 | 16090003 | 11609003-06001 | DRAG SPRING WASHER | 3033 |
| 610 | 16100021 | 11610006-01002 | DRAG WASHER | |
| 610-1 | 16100019 | 11610005-01001 | DRAG WASHER | |
| 611 | 16110037 | 11611012-06001 | EARED WASHER | |
| 612 | 16120032 | 11612012-06002 | KEY WASHER | |
| 612-1 | 16120035 | 11612015-06001 | KEY WASHER | |
| 614 | 16140001 | 11614001-06 | WASHER | |
| 615 | 16150057 | 11615007-04004C | STAR DARG KNOB | |
| 618 | 16180002 | 11618001-01 | WASHER | |
| 700 | 17000243 | 1170002706002 | DRIVE GEAR | |
| 701 | 17010138 | | DRIVE GEAR SHAFT | |
| 702 | 17020282 | 1170203306002 | PINION GEAR | |
| 703 | 17030005 | 11703006-03907 | WORM SHAFT GUARD | |
| 704 | 17040007 | 11704004-03907 | LINE GUIDE SUPPORT BAR | |
| 705 | 17050013 | 11705008-06 | TRANSMISSION GEAR | |

| key no | new part no | old part no | parts name | lot no |
|---|---|---|---|---|
| 706 | 17060006 | 11706003-06 | TRANSMISSION GEAR | |
| 707 | 17070004 | 11707003-01 | TRANSMISSION GEAR | |
| 709 | 17090004 | 11709002-03 | TRANSMISSION GEAR BUSHING | |
| 710 | 17100032 | 1171001406917 | LINE GUIDE ASSY. | |
| 712 | 17120021 | 11712011-03907 | WORM SHAFT | |
| 713 | 17130001 | 11713001-03907 | LINE GUIDE PAWL CAP | |
| 715 | 17150008 | 11715003-06001C | LINE GUIDE PAWL | |
| 720 | 17200002 | 11720002-06001 | DRIVE GEAR SHAFT BUSHING | |
| 800 | 18000012 | 11800004-02002 | CLUTCH CAM | 3031 |
| 800 | 18000014 | 11800004-12002 | CLUTCH CAM | |
| 801 | 18010007 | 11801005-06001 | CLUTCH SPRING | |
| 802 | 18020015 | 11802004-01 | CLUTCH BAR | |
| 804 | 18040008 | 11804008-06001 | CLUTCH SLIDER | |
| 805 | 18050004 | 11805004-06001 | PINION GEAR YOKE | |
| 806 | 18060001 | 11806001-06 | YOKE SPRING | |
| 9103 | 0910170 | 01101612-63 | BALL BEARING | |
| 9106 | 0910227 | 01041104-61 | BALL BEARING | |
| 9107 | 0910248 | 01061335-61 | BALL BEARING | |
| 912 | 19120012 | | COVER BOARD | |
| 9201 | 0920111 | 025.1x11.5x.5-6 | WASHER | |
| 9201-1 | 0920162 | 028x10x0.5-6 | WASHER | |
| 9202 | 0920284 | 025.1x9.5x0.2-6 | WASHER | |
| 9204 | 0920133 | 026x13x0.4-8 | WASHER | |
| 9205 | 0920167 | 028x36x1-1 | WASHER | |
| 9206 | 0920085 | 024.05x10x0.2-8 | WASHER | |
| 9209 | 0920282 | 025.1x8x0.2-6 | WASHER | |
| 9210 | 0920108 | 025.1x10.5x.5-6 | WASHER | |
| 9301 | 0930586 | 03223x11.5-64 | SCREW | |
| 9301-1 | 0930566 | 03222.6x9-61 | SCREW | |
| 9302 | 0930651 | 03327.52.67.561 | SCREW | |
| 9302-1 | 0930176 | 03222.6x9.5-61 | SCREW | |
| 9311 | 0930589 | 03223x12-64 | SCREW | |
| 9311-1 | 0930450 | 03123x10-64 | SCREW | |
| 9313 | 0930219 | 03327.52.6x6-61 | SCREW | |
| 9314 | 0930501 | 03212x5-617 | SCREW | |
| 9316 | 0930732 | 03414x5-617 | SCREW | |
| 9317 | 0930194 | 03312x3.5-61 | SCREW | |
| 9319 | 0930196 | 03312x5-61 | SCREW | |
| 9321 | 0930202 | 03319.4x3x7-61 | SCREW | |
| 9323 | 0930171 | 03222.6x4.5-61 | SCREW | |
| 9326 | 0930673 | 03327x2.6x4-61 | SCREW | |
| 9404 | 29000001 | 12900001-06 | E RETAINER | |
| 9406 | 29000006 | 12900006-06001 | E RETAINER | |
| 9504 | 19010001 | 11901001-06 | C ETAINER | |
| | | | | |